مافكو
MAFCO

شركة مشعل سعود محمد الفرج

MISHAL AL - FARAJ CO

A COMPLETE SOLUTION
FOR CONSTRUCTION INDUSTRY

Established to support the Following Sectors

- **Construction Companies**
- **Petrochemical Industries**
- **Oil Fields**
- **Heavy Engineering Industries**

A Complete Solution for Construction Industries

Contents

1. Anchor Bolts
2. Spacers - Chair Type
3. Spocers - Wheel Type / Pile Spacer
4. Roof Tile Spacer
5. Concreate Spocer
6. Shim Pods, Chamfer, Backup Rod
7. Formwork Accessories
8. Scaffolding Clamp
9. Precost Transport Acchors
10. Erection Anchor, Spread Anchor
11. Lifting Clutch, Ring Clutch, Lifting stud
12. Sleeve Connector Anchor, Connecting Pin
13. Sandwich Panel Anchor
14. Fixing Dowel
15. Hot Rolled Channel
16. Cold Rolled Channel, T Bolt
17. Fixing Angles
18. Anchors and Fixing
19. Nails and Catridges
20. Pipe Clamps

QUALITY POLICY STATEMENT

MAFCO is totally committed to understanding and meeting the quality needs and expectations of all our customers. MAFCO has a proud reputation for delivering quality components. We have established a comprehensive quality assurance systems that allows our company to meet all of the requirements of the ISO 9001:2008 quality assurance standard. Our quality assurance system focuses on the following principles:-

- Quality is the responsibility of every employee.
- Ethical workmanship and customer satisfaction are paramount.
- Products and services must be delivered on time and at the agreed upon price.
- Continuous improvement and training are vital to ensure that our customers receive world class product and services.
- Our management systems, practices, products, customers and employees must be measured in terms of performance. Performance indicators guide us to the area(s) in need of corrective action and review.

The entire MAFCO team will adhere to the spirit and intent of our quality policy, as well as the directives of this quality assurance manual and its supporting quality system documentation. We will continue to aggressively strive to ensure that customer satisfaction is achieved at all times, and in all things.

Manager - Technical & Quality assurance.

Engineering

Thrading of individual componets is a highly skilled and complex operation requiring strict controls through-out the whol process The main methods of thread forming are

- Removal of Material
- Thread Cutting using Chaser Dies
- Screw Cutting on Centre Lathes
- Grinding
- MIlling

By Plastic Deformation Threads Rolling

Thread Rolling

By this method component to be rolled is machincd to the Pitch Diormeterr witnin very close tolerances. The component is then cold rolledd forming the required thread configuration by Plastic Deformation

Material with an Elongation in excess of 8% may be threaded by this method. Thread Rolling has the following advantages over Removal of Material.

- Greater tensile and shear strength with a higher wear resistance.
- Higher accuracy of pitch.
- Brig surface finish
- Higher resistance to jamming during assembley and thread fatigue.

Raw Material Verification

All the incoming raw materials, and semi finished items are thoroughly checked for dimensional and physical accuracy. Apart from the mechanical checking we also confirm the integrity of the steel by checking the chemical properties of the steel in our state of te art in house laboratory. The Mill certification is them verified for conformity to the relevant stands. Our stringent inspection process gives our clients even greater peace of mind in regards to the integrity of the materials supplied by Asia Bolts Industries L.L.C

In House Inspection

Regular thorough inspection is carried out on all otems during the production process to ensure that all necessry standards are rigorously adhered to and product is strictly in compliance to the standard against which its manufactured and supplied.

Inspection Instrumentation and Gauges

All instrumentation and gauges used in our inspection procedures are regularly checked and calibrated by an independents, accredited, authority.

Test Certification

MAFCO have a state of the art in house test Facility where material verification is carried out and the results logged on our fully computerized data bank to allow immediate and accurate issuance of full chemical and physical test certification. Our valuable Clients may request additional testing and whlcome to witness such testing in our facility.

ANCHOR BOLTS STRAIGHT TYPE

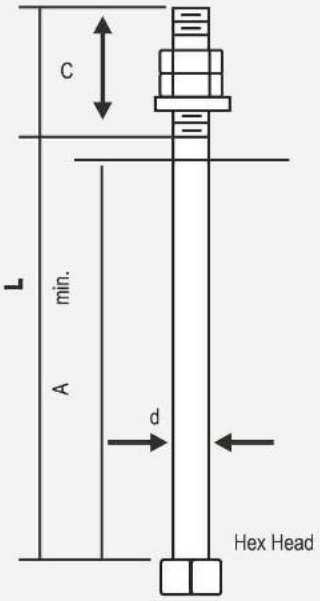

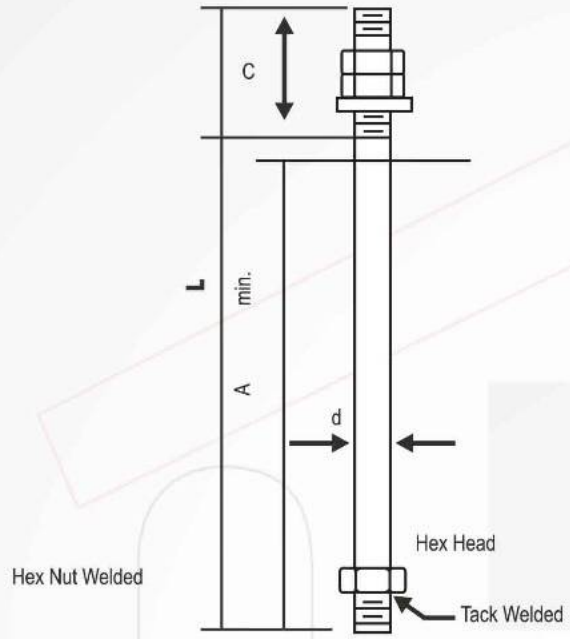

Anchor Bolts		Dimension in MM			Minimum Edge Distance		Capacity	
Dia in Inches	Dia in MM	A Minimum Depth	C Thread Length	L Total Length	MM To Center Bolts Tension	MM To Center Bolts Shear	Shear KN	Tension KN
1/2"	12	250	40	355	80	100	4.5	6.8
5/8"	16	250	40	355	85	125	6.8	7.7
3/4"	20	300	50	405	85	150	9.9	10.4
7/8"	22	360	50	460	85	175	14.0	13.1
1"	24	410	65	510	90	175	18.5	15.8
1-1/8"	27	460	75	560	90	200	23.4	15.8
1-1/4"	32	510	75	610	100	225	29.7	18.0
1-3/8"	36	560	90	680	100	250	35.1	
1-1/2"	39	610	90	730	100	275	43.2	
1-5/8"	42	660	100	800	125	300	50.9	
1-3/4"	45	710	115	865	125	325	58.5	
2"	50	810	125	990	150	350	77.4	
2-1/4"	57	910	140	1100	150	400	101.7	
2-1/2"	64	1020	160	1240	175	450	125.6	

Coating: Mill Finish, Electro Galv. & Hotdip Galv.
Grade : 4.6, A307A, A307B, ASTM A36, 8.8, B7, SS304, SS316

ANCHOR BOLTS L - TYPE

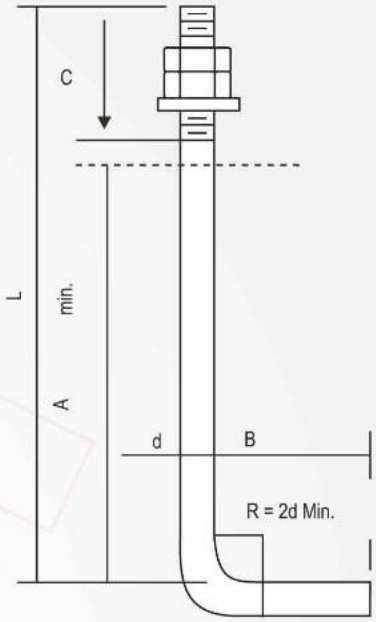

Anchor Bolts		Dimension in MM				Minimum Edge Distance		Capacity	
Dia in Inches	Dia in MM	A Minimum Depth	B Bend	C Thread Length	L Total Length	MM To Center Bolts Tension	MM To Center Bolts Shear	Shear KN	Tension KN
1/2"	12	250	100	40	355	80	10	4.5	8.1
5/8"	16	250	100	40	355	85	125	6.8	10.4
3/4"	20	300	150	50	405	85	150	9.9	14.0
7/8"	22	360	150	50	460	85	175	14.0	18.0
1"	24	410	200	65	510	90	175	18.5	22.5
1-1/8"	27	460	200	75	560	90	200	23.4	24.3
1-1/4"	32	510	200	75	610	100	225	29.7	28.8
1-3/8"	36	560	200	90	660	100	250	35.1	33.8
1-1/2"	39	610	200	90	710	100	275	43.2	38.7
1-5/8"	42	660	200	100	760	125	300	50.9	44.1
1-3/4"	45	710	255	115	850	125	325	58.5	46.8
2"	50	810	255	125	950	150	350	77.4	58.5
2-1/4"	57	910	255	140	1070	150	400	101.7	70.7
2-1/2"	64	1020	255	160	1200	175	450	125.6	84.2

Coating: Mill Finish, Electro Galv. & Hotdip Galv.
Grade : 4.6, A307A, A307B, ASTM A36, 8.8, B7, SS304, SS316

ANCHOR BOLTS J - TYPE

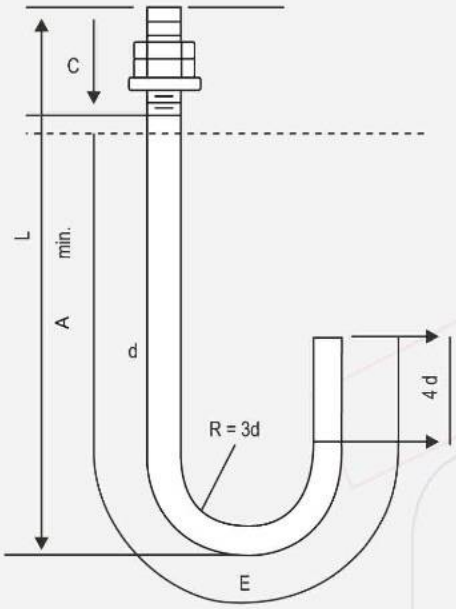

Anchor Bolts		Dimension in MM			Cut Length		Minimum Edge Distance			Capacity
Dia in Inches	Dia in MM	A Minimum Depth	C Thread Length	E Hook Length	L Total Length	Cut Length	MM To Center Bolts Tension	Shear	Shear KN	Tension KN
1/2"	12	250	50	190	410	542	80	100	4.5	9.5
5/8"	16	250	60	240	420	595	85	125	6.8	14.9
3/4"	20	300	70	285	485	705	85	150	9.9	22.5
7/8"	22	360	75	335	545	787	85	175	14.0	31.1
1"	24	410	90	380	610	874	90	175	18.5	40.5
1-1/8"	27	460	100	430	675	970	90	200	23.4	51.3
1-1/4"	32	510	115	475	735	1065	100	225	29.7	65.3
1-3/8"	36	560	125	525	800	1163	100	250	35.1	78.3
1-1/2"	39	610	125	570	865	1281	100	275	43.2	95.0
1-5/8"	42	660	145	620	925	1354	125	300	50.9	108.5
1-3/4"	45	710	150	665	990	1452	125	325	58.5	128.3
2"	50	810	180	760	1120	1648	150	350	77.4	168.8
2-1/4"	57	910	200	855	1245	1861	150	400	101.7	212.0
2-1/2"	64	1020	220	955	1370	2074	175	450	125.6	258.8

Coating: Mill Finish, Electro Galv. & Hotdip Galv.
Grade : 4.6, A307A, A307B, ASTM A36, 8.8, B7, SS304, SS316

ANCHOR BOLTS - TYPE 1, 1S, 2, 2S, 3, 3S

ARAMCO STANDARD

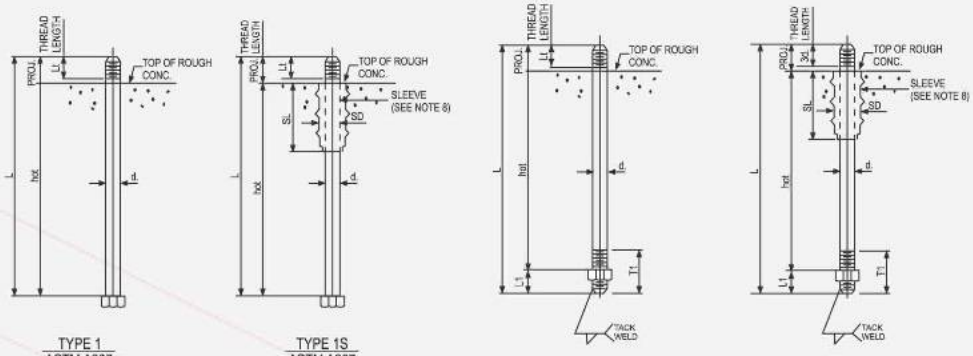

TYPE 1
ASTM A307

TYPE 1S
ASTM A307

TYPE 2
ASTM A36/A36M or
ASTM F1554, Gr, 36
(SEE NOTE 4)

TYPE 2S
ASTM A36/A36M or
ASTM F1554, Gr, 36
(SEE NOTE 4)

FORMAT FOR ANCHOR BOLT
CALL OUT ON DRAWINGS

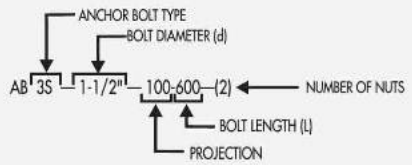

INCH SIZES

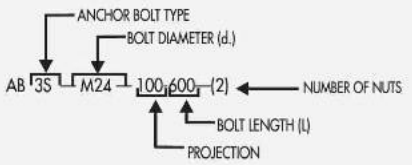

METRIC SIZES

Table 1 : ASTM A307, Grade Sizes Inch

Bolt Properties						Type 1				Type 15					
Size d Inch	Type	LT (in)	TPI	Stress Area (In^2)	Max. Proj. (Bolt o) (mm)	Min. 12d (mm)	Length (L) Proj. (In)	Edge Dist 4d>M+da/2 (mm)	Spacing 6d. (mm)	Min. SL+150 (mm)	Length (L) Proj. (In)	Edge Dist (Note dl) (mm)	Spacing (note s) (mm)	Sleeve SD (mm)	Sleeve SL (mm)
1/2"	Hex	1.50	13	0.142	107	152	10	100	76	275	15	127	114	50	125
5/8"	Hex	1.75	11	0.226	115	191	12	110	95	325	17-1/2	127	129	50	175
3/4"	Hex	2.00	10	0.334	123	229	14	111	114	325	17-1/2	127	145	50	175
2/8"	Hex	2.25	9	0.462	131	267	15-1/4	113	133	325	18	127	161	50	175
1"	Hex	2.50	8	0.606	139	305	17-1/2	114	152	400	21	139	202	75	250
1-1/8"	Hex	2.75	7	0.763	146	343	19-1/2	116	171	421	22-1/2	139	218	75	250
1-1/4"	Hex	3.00	7	0.969	154	381	21	127	197	441	23-1/2	149	234	75	250
1-3/8"	Hex	3.25	6	1.155	162	419	23	140	210	460	24-1/2	160	250	75	250
1-1/2"	Hex	3.50	6	1.495	170	457	24-1/2	152	229	604	30-1/2	183	291	100	375
1-3/4"	Heavy Hex	4.00	5	1.899	186	533	28-1/2	178	267	642	32-1/2	206	322	100	375
2"	Heavy Hex	4.50	4.5	2.498	202	610	32	203	305	755	37-1/2	228	354	100	450
2-1/4"	Heavy Hex	5.00	4.5	3.248	218	686	35-1/2	229	343	793	40	258	386	100	450
2-1/2"	Heavy Hex	5.50	4	3.999	234	762	39	254	381	981	48	297	468	150	600
2-3/4"	Heavy Hex	6.00	4	4.934	250	838	43	279	419	1019	50	319	499	150	600
3"	Heavy Hex	6.50	4	5.967	266	914	46-1/2	305	457	1057	52	342	531	150	600

Notes: Table-1
1. Minimum Edge distance is measured from the centerline of the Anchor Bolt to the EDGE of the Concrete.
2. ASTM A307 Bolt lengths may not be available for the larger diameter type is Bolts.
3. If the required projection exceed the maximum projection in the table above, use A type 2 Anchor Bolt.
4. EDGE distance for bolts with sleeves must be increased by (SD-d.), 1/2
5. Spacing of Bolts with sleeves must be increased by (SD-d.)
6. TPI + threads per inch

Anchor Material Specifications	Sizes	Profile	Thread Profile	Nut Material Specification	Coating Type
ASTM A307, Grade A	½" thru 1-1/2" Over 1-1/2	Hex bolt Heavy Hex bolt	ASME B18.21 UNC	ASTM A563, Grade A Heavy Hex	Galvanized to ASTM A153, ClassC Or ASTM B695 ,Class 50
ASTM A36/A36M	½"thru 3" M12thru M72	Rod	ASME B18 2.1 , UNC Class 2 ASME B1.13M	ASTM A563, Grade A Heavy Hex	Galvanized to ASTM A153, Class C Or ASTM B695 ,Class 50
ASTM F1554 M GR , 36	½ thru 3"	Rod	ASME B18 2.1 , UNC Class 2	ASTM A563, Grade A Heavy Hex	Galvanized to ASTM A153, Class C Or ASTM B695 ,Class 50
ASTM 193/A 193M GR . B7	¾ "thru 3" M20 thru M72	Bolts / Rods	ASME B1 .1, 8 UNC Class 2 ASME B1.13M	ASTM A563 , DH Heavy Hex Or ASTM A 194/A 194 M	Painted as per APCS - IC OR APCS - IF PER SAES -H- 001
ASTM F1554 Gr . 105	½"thru 3" M12thru M72	Rod	ASME B1.1, UNC Class 2	ASTM A563 , DH Heavy Hex Or ASTM A 194/A 194 M	Galvanized to ASTM A153, Class C Or ASTM B695 ,Class 50

Table 2 : ASTM A193 , F1554 Grade 105 Anchor Rods inch Series

Bolt Properties					Type 1			Type 15				
Size d Inch	TPI	Stress Area (In^2)	LT d + 13 (mm)	TI 2d (mm)	Min 12d. (mm)	Edge Dist 4d>M+da/2 (mm)	Spacing 6d. (mm)	Min. SL+150 (mm)	Edge Dist (Note b) (mm)	Spacing (note o) (mm)	Sleeve SD (mm)	Sleeve SL (mm)
1/2"	13	0.142	26	25	152	100	76	275	127	114	50	125
5/8"	11	0.226	29	32	191	110	95	325	127	129	50	175
3/4"	10	0.334	32	38	229	111	114	325	127	145	50	175
7/8"	9	0.462	35	44	267	113	133	325	127	161	50	175
1"	8	0.606	38	51	305	114	152	400	139	202	75	250
1-1/8"	7	0.752	42	57	343	116	171	421	139	218	75	250
1-4/4"	7	0.969	45	64	381	127	191	441	149	234	75	250
1-3/8"	6	1.155	48	70	419	140	210	160	160	250	75	250
1-1/2"	6	1.405	51	76	457	152	229	604	183	291	100	375
1-3/4"	5	1.899	57	89	533	178	267	642	206	322	100	375
2"	4.5	2.498	64	102	610	203	305	755	228	354	100	450
2-1/4"	4.5	3.248	70	114	686	229	343	793	250	386	100	450
2-1/2"	4.0	3.999	77	127	762	254	381	981	297	468	150	600
2-3/4"	4.0	4.934	83	140	833	279	419	1019	319	499	150	600
3"	4.0	5.967	89	152	914	305	457	1057	342	531	150	600

Notes: Table-2
1. Minimum Edge distance is measured from the centerline of the Anchor Bolt to the EDGE of the Concrete.
2. EDGE distance for bolts with sleeves must be increased by (SD-d.)/2
3. Spacing of Bolts with Sleeves must ne increased by (SD-d.)
4. TPI + thread per Inch.

Coating : Mill Finish, Electro Galv. & Hotdip Galv. and Painted

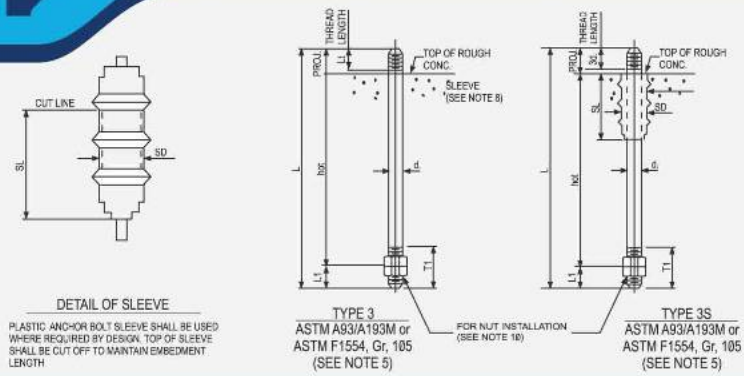

Table 3 : ASTM A193, ASTM F1554 Grade 105 Anchor Rods-inch Series

Bolt Properties					Type 3			Type 3S				
Size d inch	TPI	Stress Area (In^2)	Lt d + 13 (mm)	T1 2d (mm)	Min. 12d. (mm)	Edge Dist 4d>M+da/2 (mm)	Spacing 6d. (mm)	Min. SL+150 (mm)	Edge Dist (Note b) (mm)	Spacing (note a) (mm)	Sleeve SD (mm)	Sleeve SL (mm)
3/4"	10	0.334	51	57	229	114	114	325	130	145	50	175
7/8"	9	0.462	57	67	267	133	133	325	147	161	50	175
1"	8	0.606	64	76	305	152	152	400	177	202	75	250
1-1/8"	8	0.790	70	86	343	171	171	421	195	218	75	250
1-1/4"	8	1.000	77	95	381	191	191	441	252	234	75	250
1-3/8"	8	1.234	83	105	419	210	210	460	230	250	75	250
1-1/2"	8	1.492	89	114	457	229	229	604	260	291	100	375
1-3/4"	8	2.882	102	133	533	267	267	642	294	322	100	375
2"	8	3.125	118	155	575	301	301	690	325	360	100	450
2-1/4"	8	3.557	127	171	610	343	343	793	364	386	100	450
2-1/2"	8	4.442	140	191	762	381	381	981	424	468	150	600
2-3/4"	8	5.425	153	218	838	419	419	1019	459	499	150	600
3"	8	6.506	165	229	914	457	457	1057	494	531	150	600

Notes : Table-3

1. Minimum EDGE distance is measured from the centerline of the Anchor Bolt to the EDGE of the Concrete, 2. EDGE distance for bolts with sleeves must be increased by (SD-d.)/2
3. Spacing of Bolts with sleeves must be increased by (SD-d.), 4. TPI = thread per Inch

Table 2M : ASTM A 36 Anchor Rods - Metric

Bolt Properties				Type 2			Type 2S				
Size d inch	Stress Area (In^2)	Lt d + 13 (mm)	T1 2d (mm)	Min. 12d. (mm)	Edge Dist 4d>M+da/2 (mm)	Spacing 6d. (mm)	Min. SL+150 (mm)	Edge Dist (Note b) (mm)	Spacing (note a) (mm)	Sleeve SD (mm)	Sleeve SL (mm)
M12X1.75	84.3	25	24	144	106	72	275	125	110	50	125
M16X2	157	29	32	192	108	96	275	125	130	50	125
M20X2.5	245	33	40	240	110	120	325	125	150	50	175
M24X3	353	37	40	280	112	144	400	138	195	75	250
M27X3	459	40	54	324	114	162	400	138	210	75	250
M30X3.5	561	43	60	360	120	180	400	143	225	75	250
M36X4	817	49	72	432	144	216	525	176	280	100	375
M42X4.5	1120	55	84	504	168	252	525	197	318	100	375
M48X5	1470	61	96	576	192	288	600	218	340	100	450
M56X5.5	2030	69	112	672	224	336	672	246	380	100	450
M64X6	2680	77	126	768	256	384	768	299	470	150	600
M72X6	3460	85	144	864	288	432	864	327	510	150	600

Notes : Table-2M

1. Minimum EDGE distance is measured from the centerline of the Anchor Bolt to the EDGE of the Concrete, 2. EDGE distance for bolts with sleeves must be increased by (SD-d.)/2
3. Spacing of Bolts with sleeves must be increased by (SD-d.), 4. TPI = thread per Inch

Table 2M : ASTM A 36 Anchor Rods - Metric

Bolt Properties				Type 2			Type 2S				
Size d inch	Stress Area (In^2)	Lt d + 13 (mm)	T1 2d (mm)	Min. 12d. (mm)	Edge Dist 4d>M+da/2 (mm)	Spacing 6d. (mm)	Min. SL+150 (mm)	Edge Dist (Note b) (mm)	Spacing (note a) (mm)	Sleeve SD (mm)	Sleeve SL (mm)
M12X1.75	84.3	25	24	144	106	72	275	125	110	50	125
M16X2	157	29	32	192	108	96	275	125	130	50	125
M20X2.5	245	33	40	240	110	120	325	125	150	50	175
M24X3	353	37	40	280	112	144	400	138	195	75	250
M27X3	459	40	54	324	114	162	400	138	210	75	250
M30X3.5	561	43	60	360	120	180	400	143	225	75	250
M36X4	817	49	72	432	144	216	525	176	280	100	375
M42X4.5	1120	55	84	504	168	252	525	197	318	100	375
M48X5	1470	61	96	576	192	288	600	218	340	100	450
M56X5.5	2030	69	112	672	224	336	672	246	380	100	450
M64X6	2680	77	126	768	256	384	768	299	470	150	600
M72X6	3460	85	144	864	288	432	864	327	510	150	600

Notes : Table-2M

1. Minimum EDGE distance is measured from the centerline of the Anchor Bolt to the EDGE of the Concrete, 2. EDGE distance for bolts with sleeves must be increased by (SD-d.)/2
3. Spacing of Bolts with sleeves must be increased by (SD-d.), 4. TPI = thread per Inch

Notes:

1. ANCHOR BOLTS SHALL BE SET ACCURATELY AND HELD IN PLACE BY A TEMPLATE.
2. SLEEVES SHALL BE USED WHERE SPECIFIED IN CONSTRUCTION DRAWINGS CENTER SLEEVES AROUND BOLTS.
3. ANCHOR BOLTS SHALL BE PLACED INSIDE PIER THE STEEL, BUT SHALL NOT BE TIED TO OR TOUCHING THE REBAR.
4. FULLY THREADED ASTM A36/A36M RODS MAY BE USED TO FABRICATE TYPE 2 OR TYPE 2S ANCHOR BOLTS.
5. FULLY THREADED ASTM A193/A19M RODS MAY BE USED TO FABRICATE TYPE 3 OR TYPE 3S ANCHOR BOLTS.
6. ANCHOR BOLT DESIGN SHALL COMPLY WITH SALES 0-005 AND ACI 318-02, APPENDIX D.
7. THE FINAL TIGHTENING OF ANCHOR BOLTS SHALL BE AS FOLLOWS : AFTER GROUTING OF THE BASE PLATE THE ANCHOR BOLTS SHALL BE BROUGHT TO A SNUG TIGHT CONDITION. THIS IS DEFINED AS THE TIGHTNESS THAT EXISTS AFTER A FEW IMPACTS FROM AN IMPACT WRENCH OR THE FULL EFFORT OF A MAN USING A SPUD WRENCH. AT THIS POINT ALL SURFACES SHOULD BE IN FULL CONTACT.
8. ANCHOR BOLT SLEEVES SHALL BE FULLY GROUTED IN ACCORDANCE WITH SAES-0-010 AFTER THE BASE PLATE HAS BEEN POSITIONED.
9. THE SPACING EMBEDMENT AND EDGE DISTANCE DIMENSIONS SHOWN ON THIS DRAWING ARE VALUED, EVERY ANCHOR BOLT MUST BE DESIGN PER ACI 318-02 AND MINIMUM DIMENSIONS MAY NEED TO BE INCREASED AS REQUIRED BY DESIGN.
10. TIGHTEN NUTS TO LOCK, APPLY TORQUE TO BOTTOM NUS, LOCK BOTH NUTS IN POSITION BY COUNTER PUNCHING THE THREADS AT JUNCTURE OF NUTS AND BOLT.

DRAWING NO. : AA 036322

ASTM F1554

The ASTM F1554 specification was introduced in 1994 and covers anchor bolts designed to anchor structural supports to concrete foundations. F1554 anchor bolts can take the form of either headed bolts, straight rods, or bent anchor bolts. The three grades 55 ,36, and 105 designate the minimum yield strength (ksi) of the anchor bolt. The bolts can be either cut or roll threaded and a weldable grade 55 can be substituted for grade 36 at the supplier's option. Color coding on the end – 36 blue, 55 yellow, and 105 red – helps facilitate easy identification in the field. Permanent manufacturer and grade marking is allowed under the S2 supplementary requirements.

Applications for F1554 anchor bolts include columns in structural steel framed buildings, traffic signal and street lighting poles, and overhead highway sign structures to name just a few.

F1554 Grades

F1554 Grade 36	Low carbon, 36 ksi yield steel anchor bolts
F1554 Grade 55	High strength, low alloy, 55 ksi yield steel anchor bolts
F1554 Grade 105	Alloy, heat treated, high strength 105 ksi yield steel anchor bolts

Supplementary Testing

Supplementary requirements shall apply only when specified in the purchase order or contract.

S1: Weldable version of the Grade 55 specification. Through chemical composition restrictions and by a carbon equivalency formula, S1 provides assurance of weldability. When S1 is not specified, the Grade 55 material may or may not be weldable.

S2: Permanent manufacturer's identification on the end of the anchor bolt that projects from the concrete, in lieu of color coding.

S3: Permanent grade identification on the end of the anchor bolt that projects from the concrete, in lieu of color coding.

S4: Charpy Impact requirements at 40^0+F (5^0+C) for grades 55 and 105. The minimum Charpy V-notch energy requirement is an average of 15ft-lbs for three specimens, with no one specimen falling below 12ft-lbs. Charpy Impact requirements at 20^0-F (29^0-C) for grade 105. The minimum Charpy V-notch energy requirement is an average of 15ft-lbs for three specimens, with no one specimen falling below 12ft-lbs.

F1554 Mechanical Properties

Grade	Marking	Size inches	Tensile, ksi	Yield, ksi min	Yield, MPa min	Elong. % min	RA % min
36	MF 36	½ - 4	58 - 80	36	248	23	40
55	MF 55	½ - 2	75 - 95	55	380	21	30
		2¼ - 2½	75 - 95	55	380	21	22
		2¾ - 3	75 - 95	55	380	21	20
		3¼ - 4	75 - 95	55	380	21	18
105	MF 105	½ - 3	125 - 150	105	724	15	45

- **Stamping of F1554 bolts with manufacturer's identification is a supplemental requirement (S2)**
- **Color coding is required unless the grade is stamped in accordance with supplemental requirement (S3).**
- **When Grade 36 is specified, a weldable Grade 55 may be furnished at the supplier's option.**

F1554 Chemical Properties

Element	Grade 36			Grades 55 and 105
	Sizes up to 3/4	Sizes over 3/4 to 1-1/2	Sizes over 1-1/2 to 4	
Carbon (max)	0.26%	0.27%	0.28%	
Manganese	*	0.60 - 0.90%	0.60 - 0.90%	
Phosphorus, max	0.04%	0.04%	0.04%	0.040%
Sulfur, max	0.05%	0.05%	0.05%	0.050%
Copper, min (when specified)	0.20%	0.20%	0.20%	0.20%

* Optional with the manufacturer but shall be compatible with weldable steel

F1554 Recommended Hardware

Grade	Identification	Size Inches	Recommended A563 Nut				Washer
			Plain Finish		Hot-Dip or Mechanical Zinc Coated		
			Grade	Style	Grade	Style	
36	MF 36	½ – 1½	A	Hex	A	Hex	F436
		1⅝ – 4	A	Heavy Hex	A	Heavy Hex	
55	MF 55	½ – 1½	A	Hex	A	Heavy Hex	F436
		1⅝ – 4	A	Heavy Hex	A	Heavy Hex	
105	MF 105	½ – 1½	D[1]	Heavy Hex	DH[2]	Heavy Hex	F436
		1⅝ – 3	DH[2]	Heavy Hex	DH[2]	Heavy Hex	

1 A563 grade D nuts are rarely available. A563 grade DH or A194 grade 2H should be substituted.
2 The availability of A563 grade DH nuts in nominal sizes ″1 and larger is very limited and generally available only on special orders of 50,000 or more. For smaller quantities, ASTM A194 grade 2H should be considered.

DOWEL BAR ASTM A615 GR.40 / ASTM A615 GR.60 / ASTM A615 GR.80 / ASTM A615 GR.100/ ASTM A615 / A615M / GR.8.8 STAINLESS STEEL 316 ,316 ,304L

Table 2 Tensile Requirement

	Grade 40 [280][A]	Grade 60 [420]	Grade 75 [520]	Grade 80 [550]	Grade 100 [690]
Tensile strength, min, psi [MPa]	60 000 [420]	90 000 [620]	100 000 [690]	105 000 [725]	115 000 [790]
Yield strength, min, psi [MPa]	40 000 [280]	60 000 [420]	75 000 [520]	80 000 [550]	100 000 [690]
Elongation in 8 in. [200 mm], min, %					
Bar Designation No.					
3 [10]	11	9	7	7	7
4, 5 [13, 16]	12	9	7	7	7
6 [19]	12	9	7	7	7
7, 8 [22, 25]	...	8	7	7	7
9, 10, 11 [29, 32, 36]	...	7	6	6	6
14, 18, 20 [43, 57, 64]	...	7	6	6	6

[A] Grade 40 [280] bars are furnished only in sizes 3 through 6 [10 through 19].

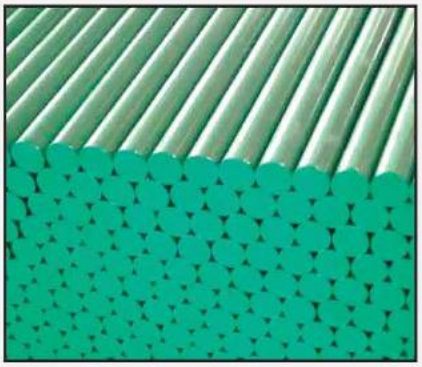

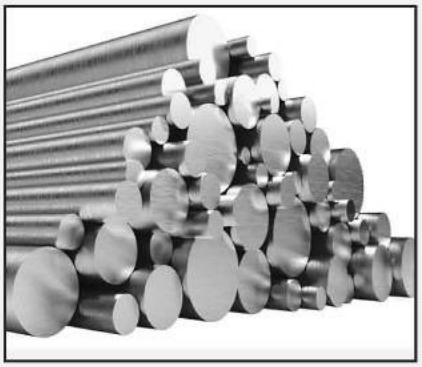

Pipe Size	Pipe O.D	R	M16 W 1/4"			M8 W 5/16"			M10 W 3/8"			M12 W 1/2"			M16 W 5/8"			M20 W 3/4"		
Inch	mm	mm	P	H	E	P	H	E	P	H	E	P	H	E	P	H	E	P	H	E
1/4	13.2	7.5	21	27	15															
3/8	16.7	9.5	25	33	18	27	38	24	28	43	28									
1/2	21.2	12	29.5	36	18	31	42	24	34	46	30									
3/4	27.2	15	34	42	18	37	48	24	40	51	30									
1	34.0	18	41	49	25	44	54	25	46	59	30	48	68	35						
1 1/4	42.7	23	50.5	57	25	52	62	30	56	68	30	57	70	35						
1 1/2	48.6	26	57	68	25	59	67	30	62	74	30	63	81	35						
2	60.5	32	70	80	30	72	80	30	74	85	30	76	90	35						
2 1/2	76.3	40	84	96	30	86	96	30	88	107	35	90	107	35						
3	89.1	46	97	107	30	99	109.5	30	101	117	35	103	119	45						
3 1/2	101.6	52							115	132	35	116	131	45						
4	114.3	59							126	145	35	129	150	45	134	151	60			
5	139.8	72							152	175	40	154	175	45	160	175	60			
6	165.2	85							180	200	40	182	200	45	186	202	60	189	205	70
8	216.3	111										232	252	45	236	254	60	239	263	70
10	267.4	137										282	307	50	286	308	60	289	315	70
12	318.5	162										332	360	50	341	368	60	344	371	80
14	355.6	181													376	401	70	377	403	80
16	406.4	207													426	454	70	429	455	80
18	457.2	233													478	508	75	481	507	80
20	508.0	259													529	560	80	532	560	80

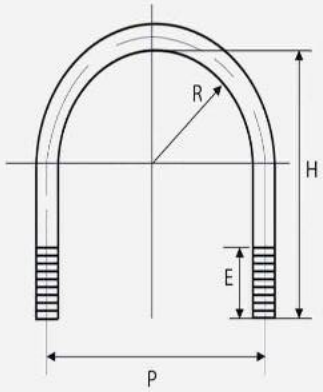

Carbon Steel & Mild Steel (Galvanized & Hot dip Galvanized) & SS 304 & 316

STAINLES STEEL

Grade	Section	BARS – HOT PRODUCED											BRIGHT BARS				SHEETS	TUBES		FITTINGS
		DIN 1013/ 7527 page 6	DIN 1014/ 7527 page 6	DIN 1015/ 7527 page 6	DIN 1017/ 59200	DIN 1028 a.sim.DIN1028	~ DIN 1029	~ DIN 1024 T and TB	~ DIN 1025 page 2 + 5	~ DIN 1026	Hollow Bars	Hexagon Hollow Bars	DIN 671	DIN 178	DIN 176	DIN 174	Standard Sizes and Cut Pieces	Seamless	Welded	
Stainless grades	1.4021	18-400											6-100							
	1.4057	20-400											2-100		11-46					
	1.4104	45-180											1,5-100	5-50	5-60					
	1.4301	6-400	8-150	14-100	10x3 up to 150x50	20x20x3 up to 180x180x20	30x20x4 up to 200x100x14	T 20-T 120 TB 30-TB 60	IPE 80-240 IPB 100-300	U 30 up to U 240	32x16 up to 250x200	36x25 up to 120x70	1,5-101,6	4-60	8-60	10x3 up to 100x20	0,5-20 thickness		20x10x1 up to 250x150x5 10x10x1 up to 250x250x5	suitable to ex stock tubes: ● Elbows ● Tees ● Reducers ● Collars ● Flanges ● Threaded Fittings ● Hydraulic Couplings
	1.4305	22-260									36x16 up to 150x160		1,5-101,6	5-50	5-60					
	1.4306	20-300	10-60		20x3 up to 100x20												0,5-40 thickness			
	1.4401	16-200					150x100x12						10-32	16 u. 20						
	1.4404	20-250			20x3 up to 100x20												1-60 thickness			
	1.4435	10-200	12-60		20x3 up to 100x20	20x20x3 up to 100x100x10							5-100		14-41		2-30 thickness			
	1.4436	10-100	12-60		15x3 up to 140x20	20x20x3 up to 100x100x10														
	1.4460	12-200											10-100							in addition: grades 1.4462 and 1.4539 ● Screws ● Nuts ● Collars
	1.4541	6-450	8-150	14-100	10x3 up to 200x20	20x20x3 up to 100x100x10					32x16 up to 250x200		2-100		8-60					
	1.4571	6-450	8-150	14-100	10x3 up to 200x20	20x20x3 up to 180x180x20	30x20x4 up to 200x100x14	T 20-T 120 TB 30-TB 60	IPE 80-240 IPB 100-180	U 30 up to U 240	32x16 up to 250 x 200	36x25 up to 120x70	2-100	5-60	6-60	10x3 up to 100x10			20x10x1,5 up to 120x60x4 10x10x1 up to 200x200x5	
Heat resisting grades	1.4713	5-100			20x4 up to 100x10	20x20x3 up to 80x80x8	40x20x4										1-30 thickness			
	1.4742	6-60			20x5 up to 100x10												1-20 thickness			
	1.4762	6-100			20x5 up to 100x12												2-20 thickness	21,3x2,6 up to 114,3x5		weld metal ● Electrodes ● Welding Rod
	1.4828	5-210			20x4 up to 100 x 20												1-25 thickness			
	1.4841	6-210	6-80		15x3 up to 100x25	20x20x3 up to 50x50x5							2-5		14-41		1-60 thickness	6x1 up to 114,3x6,02		
	1.4878	6-450	8-150	14-100	10x3 up to 200x20	20x20x3 up to 180x180x20					32x16 up to 250x200									as well as ● Steel Strip
High corr.-resist grades	1.4439	10-140					all profiles up to 100 kg/m short-term										3-12 thickness			
	1.4462	6-250															1-60 thickness	13,72x2,24 up to 114,3x6,02	21,34x2,11 up to 219,1x3	
	1.4539	6-350	10-100	17-46	20x5 up to 100x20	20x20x3 up to 50x50x5									8-60		0,5-60 thickness	13,5x2,3 up to 168,3x7,11	17,2x2 up to 323,9x3	
Nickel and Nickel Alloys	Alloy 800H 1.4876	8-130																		
	Nickel 201 2.4068*	30-130																		
	Alloy 400 2.4360	8-200											10-60 DIN 668							
	Alloy 600 2.4816	8-150																		
	Alloy 601 2.4851	8-16																		

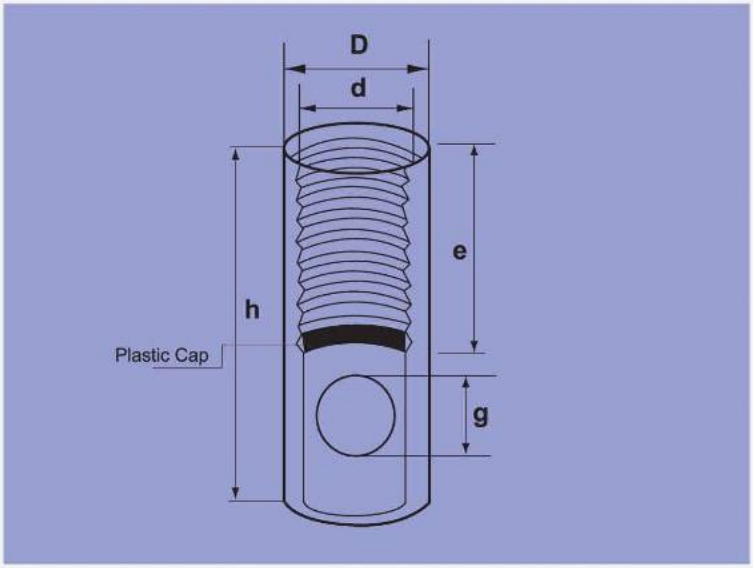

LIFTING SOCKET

Description zinc plated steel	Ref.No. zinc plated steel	Ref.No. stainless steel A2	SWL Kg	d mm	Dimensions mm D	g	h	e	Packing Pcs/ box
Socket Rd 12	90112040 G	90112040 S	500	Rd 12 X 1.75	15	8	40	22	100
Socket Rd 14	90112047 G	90112047 S	800	Rd 14 X 2.00	18	10	47	25	100
Socket Rd 16	90116054 G	90116054 S	1200	Rd 16 X 2.00	21	13	54	27	100
Socket Rd 18	90118065 G	90118065 S	1600	Rd 18 X 2.50	24	13	65	34	100
Socket Rd 20	90120069 G	90120069 S	2000	Rd 20 X 2.50	28	15	69	35	100
Socket Rd 24	90124078 G	90124078 S	2500	Rd 24 X 3.00	31	18	78	43	100
Socket Rd 30	90130103 G	90130103 S	4000	RD 30 X 3.50	40	22	103	56	50
Socket Rd 36	90136125 G	90136125 S	6300	Rd 36 X 4.00	47	27	125	68	25
Socket Rd 42	90142145 G	90142145 S	8000	Rd 42 X 4.50	54	32	145	80	20
Socket Rd 52	90152195 G	90152195 S	12500	Rd 52 X 5.00	67.2	40	195	100	10

Installation Instructions

Neuro Lifting Sockets require additional reinforcement to be channeled through the cross hole. This helps the forces to be transmitted to the concrete.

While installing neuro Lifting Socket special care to be taken to fix the reinforcement bar to the cross hole of the socket firmly. If there is space between neuro Lifting Socket and the reinforcement bar , the socket will be pulled against the rebar thus spalling off the concrete surrounding the socket. In this case there will not be any lateral support for the neuro Lifting Socket at the time of lifting at an angle.

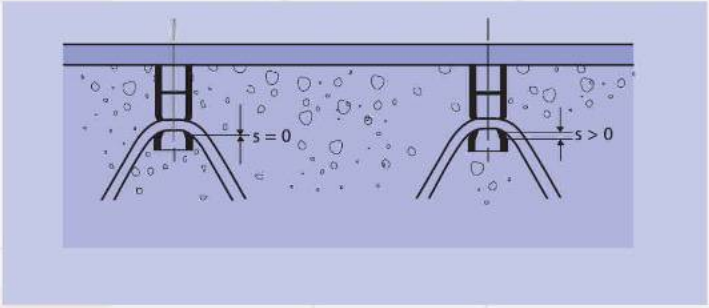

Lateral Reinforcement

Lifting at an angle

When neuro Lifting Socket are used to take inclined forces, the horizontal force produced have to be absorbed by the concrete. Additional reinforcement is required for high horizontal force or low concrete strength . In this case additional reinforcement bar must be attached to the structural reinforcement.

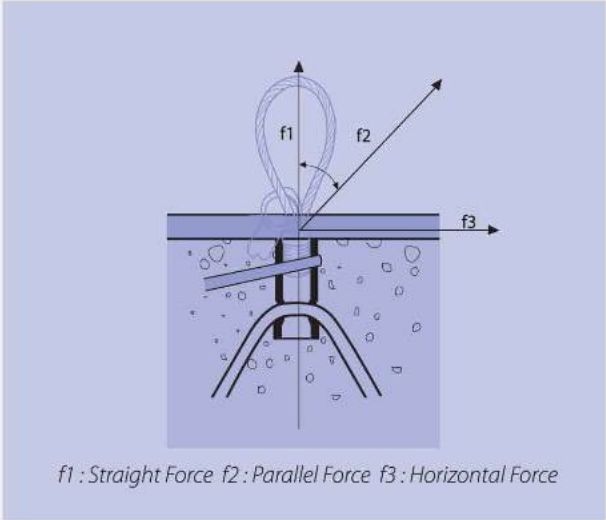

f1 : Straight Force f2 : Parallel Force f3 : Horizontal Force

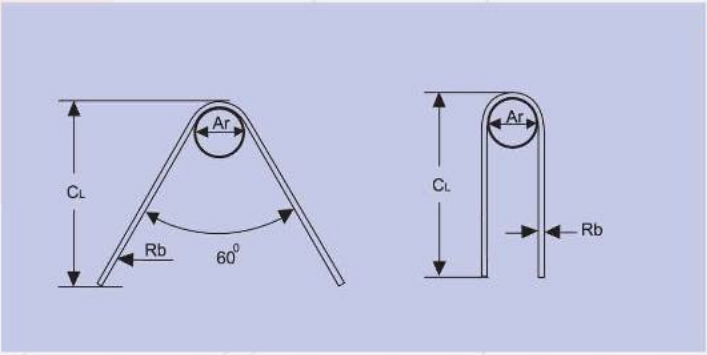

Relation between the length of the rebar and the socket size while lifting.

Size	SWL Kg	Rb mm	Ar min / mm	Lifting Strength N/mm² 10	15	25	Lifting Strength N/mm² 10	15	25
				Length of legs / cutting length cm					
Rd 12	500	**6**	24	25/51	22/45	17/35	22/46	19/40	15/32
Rd 14	800	**8**	32	30/61	26/53	20/41	26/54	23/48	18/38
Rd 16	1200	**10**	40	36/73	31/63	24/49	32/67	28/59	21/45
Rd 18	1600	**10**	40	48/97	42/85	32/65	42/87	36/75	28/59
Rd 20	2000	**12**	48	50/101	43/87	34/69	44/91	38/79	29/61
Rd 24	2500	**14**	56	55/111	47/95	36/73	47/98	41/86	31/66
Rd 30	4000	**16**	64	75/152	65/132	50/102	65/134	56/116	44/92
Rd 36	6300	**20**	140	95/193	82/167	63/129	82/172	71/150	55/118
Rd 42	8000	**25**	175	97/198	84/171	65/134	84/178	72/154	56/122
Rd 52	12500	**28**	196	138/280	119/242	90/184	117/246	100/212	78/168

Additional reinforcement

(at direction of load transverse to longitudinal axis of socket)

A lateral reinforcement is required when neuro lifting sockets are loaded perpendicular to their longitudinal axis (when ß > 12.5 degrees) (Figure S3).

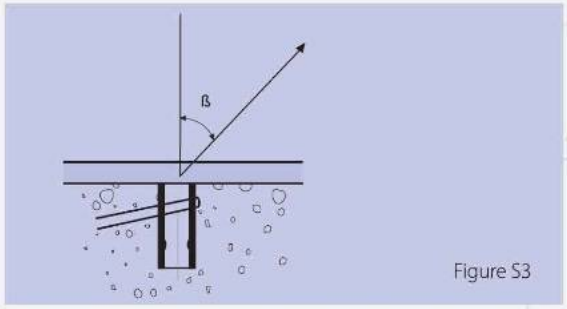

Figure S3

NEURO SWIVEL LIFTING SCREW

Lateral reinforcement with direction of load in longitudinal panel axis.

Size	SWL Kg	Rb1 mm	Rb2 mm	Ar mm
Rd 12	500	6	15	24
Rd 14	800	6	20	24
Rd 16	1200	8	20	32
Rd 18	1600	8	25	32
Rd 20	2000	8	30	32
Rd 24	2500	10	30	40
Rd 30	4000	12	40	48
Rd 36	6300	14	55	56
Rd 42	8000	16	60	64
Rd 52	12500	20	75	40

Additional lateral reinforcement

(direction of load transverse to longitudinal axis of socket.) (Concrete >= 15 N/mm^2)

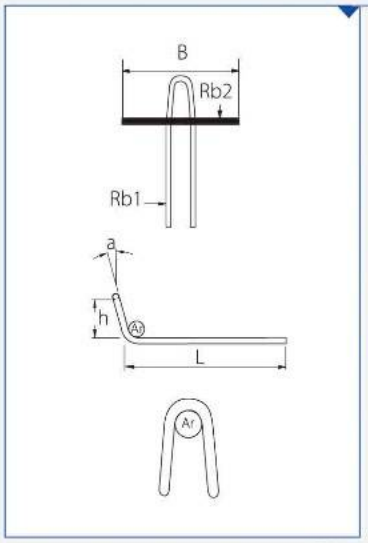

Allowable straight pull kN	Allowable lateral force under worst conditions kN	Angle a^0	B mm	h mm	L mm
5	2.5	15	280	23	270
8	4	15	350	28	350
12	6	15	400	33	420
16	8	15	450	39	460
20	10	15	490	44	490
25	12.5	15	550	51	520
40	20	15	580	68	517
63	31.5	15	700	90	690
80	40	15	850	111	830
120	62.5	15	1000	134	930

SWL : Safe Working load Rb : Reinforcement bar Ar : Additional reinforcement

Minimum reinforcement , Edge distances and Minimum panel thickness

No additional reinforcement is required for lifting the cocrete with a minimum compressive strength of 15 /mm^2.

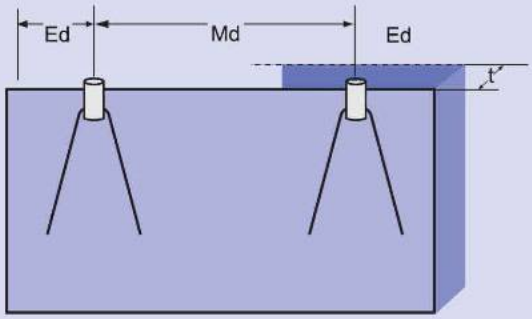

Minimum mesh reinforcement for the concrete elements.

Anchor	Reinforcement mesh mm^2 / m
Rd 12	131
Rd 14	131
Rd 16	131
Rd 18	188
Rd 20	188
Rd 24	188
Rd 30	188
Rd 36	188
Rd 42	188
Rd 52	188

The minimum thickness of the concrete elements and the minimum edge distances

Size	Edge distance mm Ed	Minimum distance mm Md	Minimum panel thickness mm t
Rd 12	150	300	60
Rd 14	200	400	70
Rd 16	200	400	80
Rd 18	250	500	95
Rd 20	275	550	110
Rd 24	300	600	125
Rd 30	350	650	140
Rd 36	400	800	200
Rd 42	500	1000	240
Rd 52	600	1200	280

Lateral and shear forces

When lifting the concrete in the horizontal position lateral and shear forces act simultaneously. A lateral reinforcement bar is required in this case. But this lateral reinforcement can be avoided if the angle y is greater than or equal to 15 degrees. If the lifting is by using a double sling shear reinforcement is used. There is no need to reduce the carrying capacity of the anchors upto an angle ß ≤ 45 degrees.

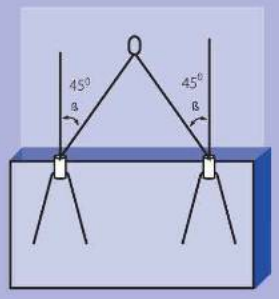

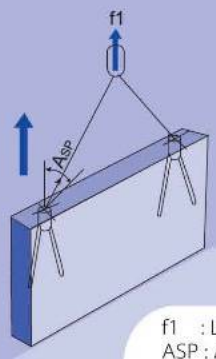

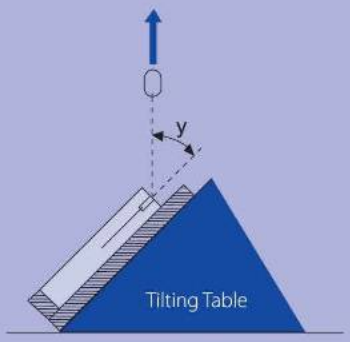

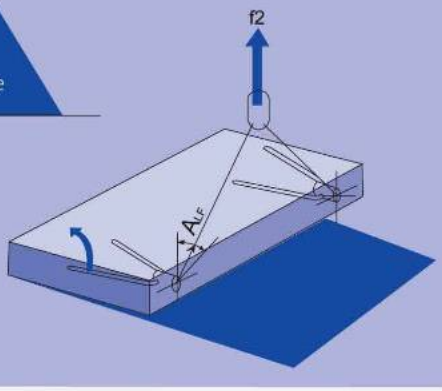

f1 : Lifting forces at parallel shear pull
ASP : Allowable Straight Pull
f2 : Lifting forces at combined shear pull
ALF : Allowable Lateral force

LIFTING LOOP

neuro Lifting loops are compatiable with all neuro precast transport anchors.

The wire rope is made of a special zinc solid steel wire rope, the thread is made of bright precision steel.

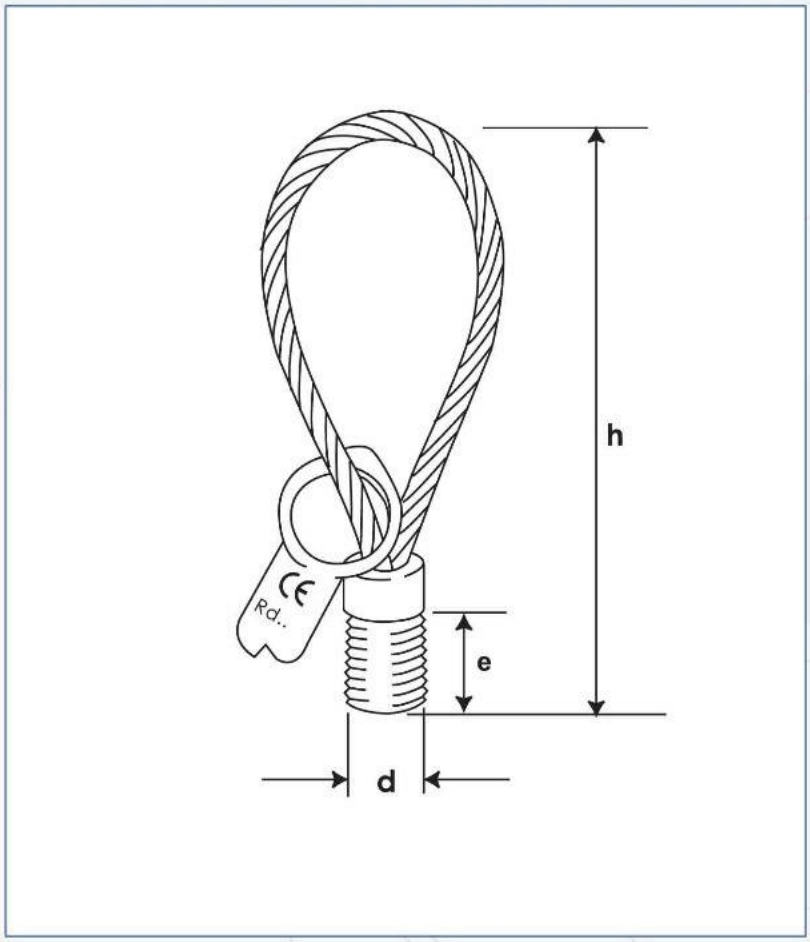

Description	Ref.No.	Ref.No.	**S.W. L kg**	d mm	e mm	h mm
Loop Rd 12	905R 12	905M 12	**500**	12	22	155
Loop Rd 14	905R 14	905M 14	**800**	14	25	155
Loop Rd 16	905R 16	905M 16	**1200**	16	27	155
Loop Rd 18	905R 18	905M 18	**1600**	18	34	190
Loop Rd 20	905R 20	905M 20	**2000**	20	35	215
Loop Rd 24	905R 24	905M 24	**2500**	24	43	255
Loop Rd 30	905R 30	905M 30	**4000**	30	56	300
Loop Rd 36	905R 36	905M 36	**6300**	36	68	340
Loop Rd 42	905R 42	905M 42	**8000**	42	80	425

FULLY THREAD ROD

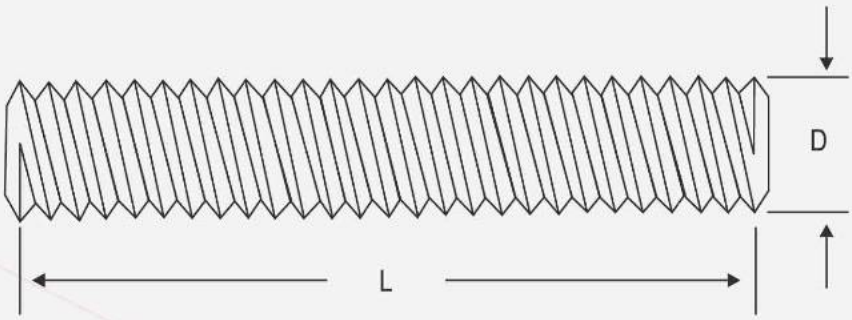

Note :

1. The stud bolts will generally conform to ASTM, A307A, A307B, DIN 975
2. As per standard

MM	PITCH
06	1.00
08	1.25
10	1.50
12	1.75
14	2.00
16	2.50
18	2.50
20	2.50
22	3.00
24	3.00
27	3.00
30	3.50
33	3.50
36	4.00
39	4.00
42	4.50
45	4.50
48	5.00
52	5.00
56	5.50
64	6.00

UNC	PITCH
1/4"	20
5/16"	18
3/8"	16
1/2"	13
5/8"	11
3/4"	10
7/8"	9
1"	8
1-1/8"	7
1-1/4"	7
1-1/2"	6
1-3/4"	5
2"	4
2-1/2"	4.5

Coating : Electro Galv., Hotdip Galv., Stainless Steel Brass
Grade : 4.8 , 8.8, A307A, A307B, A36, SS304, SS316

STUD BOLTS

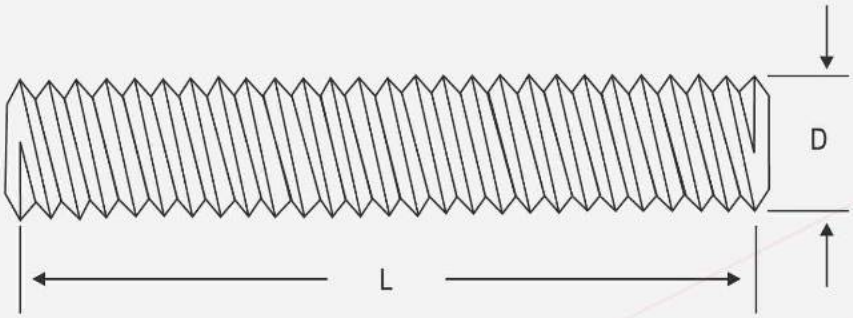

Dimensions:

Note :

1. The stud bolts will generally conform to ASTM A 193 Gr: B7, B7M, B16, B8, B8M , A320 B8, B8M, L7, A307B
2. Threads will conform to class 2A of united coure threads as per ANSI BI.I.
3. Material : medium carbon chromium Molybdeum steel, CR- Mo alloy Steel (Gr-Mo).
4. As per standard
5. All dimensions are in inches.

Inch. Series , UNC/UN Dimensions

Nominal Thread Size 'D'	TPI		Length 'L'
	UNC	UN	
1/2"	13	-	144"
5/8"	11	-	144"
3/4"	10	-	144"
7/8"	9	-	144"
1"	8	-	144"
1-1/8"	-	8	144"
1-1/4"	-	8	144"
1-3/8"	-	8	144"
1-1/2"	-	8	144"
1-5/8"	-	8	144"
1-3/4"	-	8	144"
1-7/8"	-	8	144"
2"	-	8	144"
2-1/8"	-	8	144"
2-1/4"	-	8	144"

Nominal Thread Size 'D'	TPI		Length 'L'
	UNC	UN	
2-3/8"	-	8	144"
2-1/2"	-	8	144"
2-5/8"	-	8	144"
2-3/4"	-	8	144"
2-7/8"	-	8	144"
3"	-	8	144"
3-1/8"	-	8	144"
3-1/4"	-	8	144"
3-3/8"	-	8	144"
3-1/2"	-	8	144"
3-5/8"	-	8	144"
3-3/4"	-	8	144"
3-7/8"	-	8	144"
4"	-	8	144"

Longer length than specified could be supplied against special order .

Coating : Self, Black, Electro galv. Cadmium, Hotdip Galv., Ceramic Fluorpolymer Coating.

CLIP SPACER

Fast and tight clip action for securely holding the reinforcement with large clamp range for steel reinforcement bar 4-16 mm.

Color : Grey & White
Material : High density polyethylene (HDPEB-5429A)

	Concrete Cover mm	Bar Dia. mm	Packing (pcs/bag)
20	20	4-20	2000
25	25	4-20	2000
30	30	4-20	1000
40	40	4-20	1000
50	50	4-20	1000
75	75	4-26	500

CLIP SPACER

Fast and tight clip action for securely holding the reinforcement with large clamp range for steel reinforcement bar 8-32 mm.

Color : Grey & White
Material : High density poly ethylene (HDPEB-5429A)

Type	Concrete Cover mm	Bar Dia. mm	Packing (pcs/bag)
75	75	8-24	500
100	100	8-24	200

CHAIR SPACER

For great stability and large load bearing capacity. Bottom reinforcement in slabs,large area steel support.

Color : Grey & White
Material : High density poly ethylene (HDPE B-5429A)

Type	Concrete Cover mm	Bar Dia. mm	Packing (pcs/bag)
20	20	8-32	2000
30	30	8-32	1000
40	40	8-32	1000
50	50	8-32	1000

TWO BAR SPACER

Used to tie and hold two bars at overlap as a replacement for tiewire.

Color : Grey & White
Material : High density polyethylene(HDPEB-5429A)

Type	Bar Dia. mm	Packing (pcs/bag)
TBS	8-16	1000

WHEEL SPACER

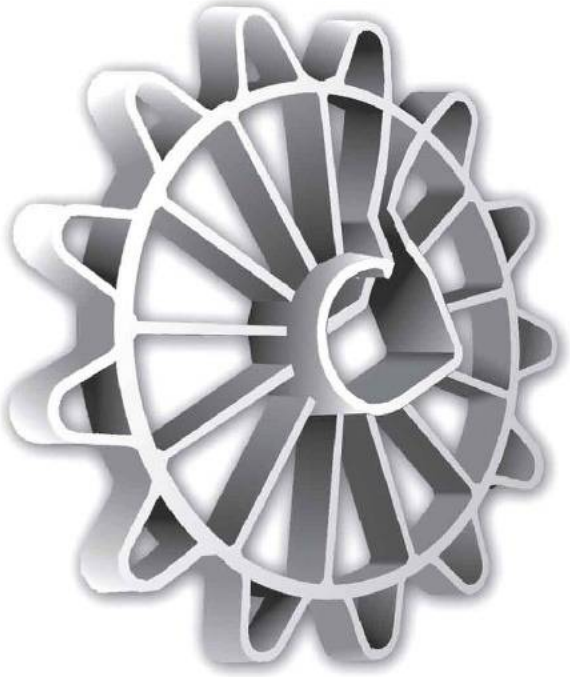

WSA Wheel Spacer for universal use and also under extreme conditions. With clamping tounge for securely clamping wide range of bar size. Open structure for unobstructed concrete flow . Minimum contact with form work Extra wide area reduces possibility of tipping over.

Color : Grey & White
Material : High density poly ethylene (HDPE B-5429A)

Type	Concrete Cover mm	Bar Dia. mm	Packing (pcs/bag)
20	20	4-20	1000
25	25	4-20	500
30	30	4-20	500
40	40	4-20	250
50	50	4-20	250
60	60	4-20	200
75	75	4-26	100
100	100	16-32	50

PILE SPACER

closed

Color : Grey & White
Material : High Density Polyehylene(HDPE B-5429A)

Type	Concrete Cover mm	Bar Dia. mm	Packing (pcs/bag)
75	75	4-26	100
100	100	16-32	50

PILE SPACER

open

Color : Grey & White
Material : High Density Polyehylene(HDPE B-5429A)

Type	Concrete Cover mm	Bar Dia. mm	Packing (pcs/bag)
75	75	4-26	100
100	100	16-32	50

SHIMPAD

For leveling precast concrete parts and facade elements, to level and adjust concrete plate blocks etc; compression proof without slit.

Colour : Grey
Material : Polystyrene (HIPS PS 330)

Thickness	Size mm	Packing (pcs/bag)	Weight kg/bag
2	70 x 70	1000	12.0
3	70 x 70	1000	18.0
5	70 x 70	500	15.0
10	70 x 70	200	15.0

CHAMFER FIX

Color : Grey and White
Material : High Density Polyehylene(HDPE B-5429A)

Type	Length mm	Dimensions mm		
		a	b	c
CF 11	2m	10	10	14.14
CF 15	2m	15	15	21.21
CF 20	2m	20	20	28.28
CF 25	2m	25	25	35.35

CHAMFER FIX

Color : Grey and White
Material : High Density Polyehylene(HDPE B-5429A)

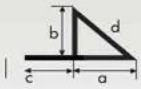

Type	Length mm	Dimensions mm			
		a	b	c	d
CFN 11	2m	10	10	10	14.14
CFN 15	2m	15	15	15	21.21
CFN 20	2m	20	20	20	28.28
CFN 25	2m	25	25	25	35.35

BACK-UP-ROD

USE IT TO FILL ALL VOIDS & IMPROVE THE INSULATION

Density: 39 kg/m^3
% Elongation: 17.28
Tensile Strength: 112.16 kg/m^2

Diameter mm	Packing (mtr/bundle)
6	2000
10	1000
15	600
20	400
25	400
30	300
35	300
40	200
50	100

USE OF BACK-UP-RODS

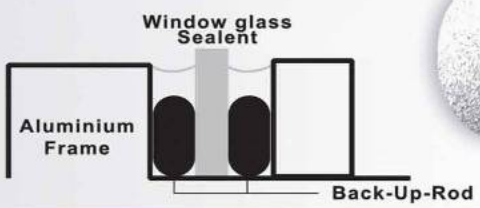

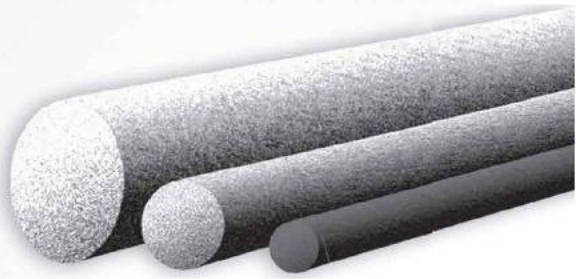

PRE-CASTED BOARD AND CREVICES

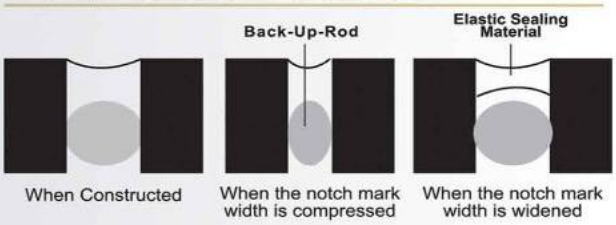

PVC-PIPE

Size	22 mm
Packing	2 mtrX 50 pcs
Material	PVC

WING NUT

Material. GTW 45, Galvanised

Working Load kN	h mm	d mm	w mm	Hex.Size s mm
90	60	33	90	27
90	60	40	90	30

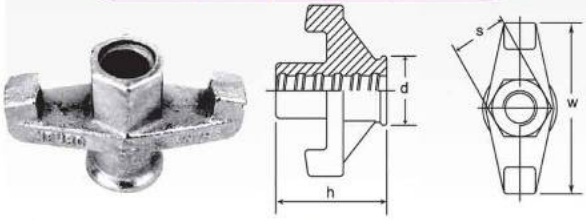

PVC-CONE

Size	22 mm
Packing	1000 pcs
Material	HDPE (13-5429A)

TIE ROD

Material. Non Ductile Iron

Size mm	Packing
15X17	*6 mtr

*Cut lengths available as required

SCAFFOLDING CLAMP

Fixed Type Clamp (48.6Φ x 48.6)

Swivel Type Clamp (48.6Φ x 48.6)

PLATE WASHER

*Size	120X120X6 mm
Packing	100 pcs
Material	Non Ductile Iron

*4mm, 5mm & 8mm thick on order

WATER STOP

with Adaptor size Ø26mm

Material. GTW 45, Galvanised

Working Load kN	L mm	d mm	D mm	Hex.Size (s)mm
90	110	Ø26	Ø65	30

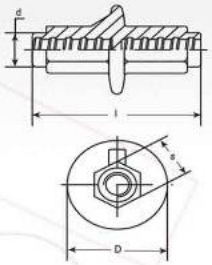

WATER STOP

Waterstop ST

Material. GTW 45, Galvanised

Working Load kN	H mm	Hex.Size (s)mm
90	110	30

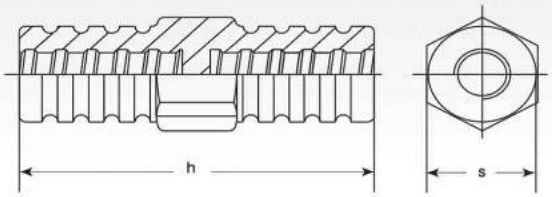

HEX NUT 50X30

Material. St 52.3, Galvanised

Working Load kN	L mm	Hex.Size (s)mm
90	50	30

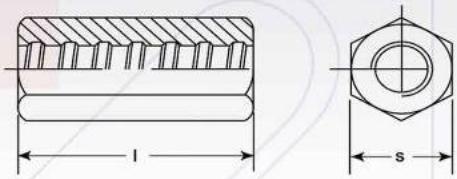

PVC-STEEL CONE

Material. St 52.3

Working Load kN	d mm	D mm	L mm	L1 mm	Hex.Size (s)mm
90	Ø46	60	110	55	24

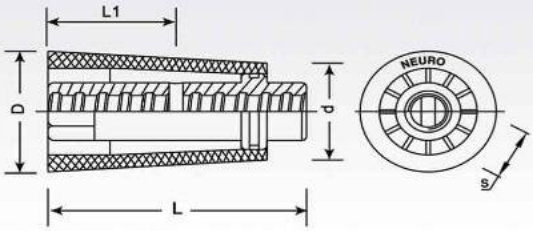

HEX NUT 90X30

Material. St 52.3, Galvanised

Working Load kN	L mm	Hex.Size (s)mm
90	90	30

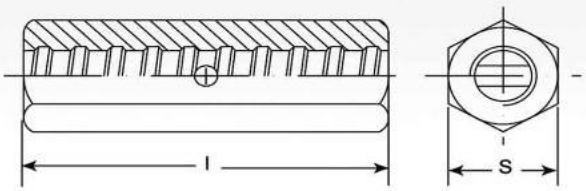

STEEL CONE ST

Material. St. 52.3

Working Load kN	d mm	D mm	L mm	L1 mm
90	Ø40	Ø 54	100	47

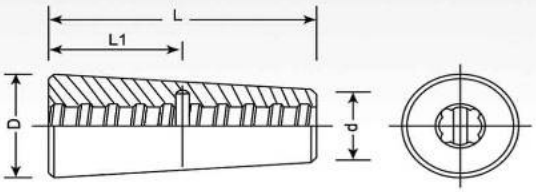

SANDWICH PANEL ANCHOR

4700

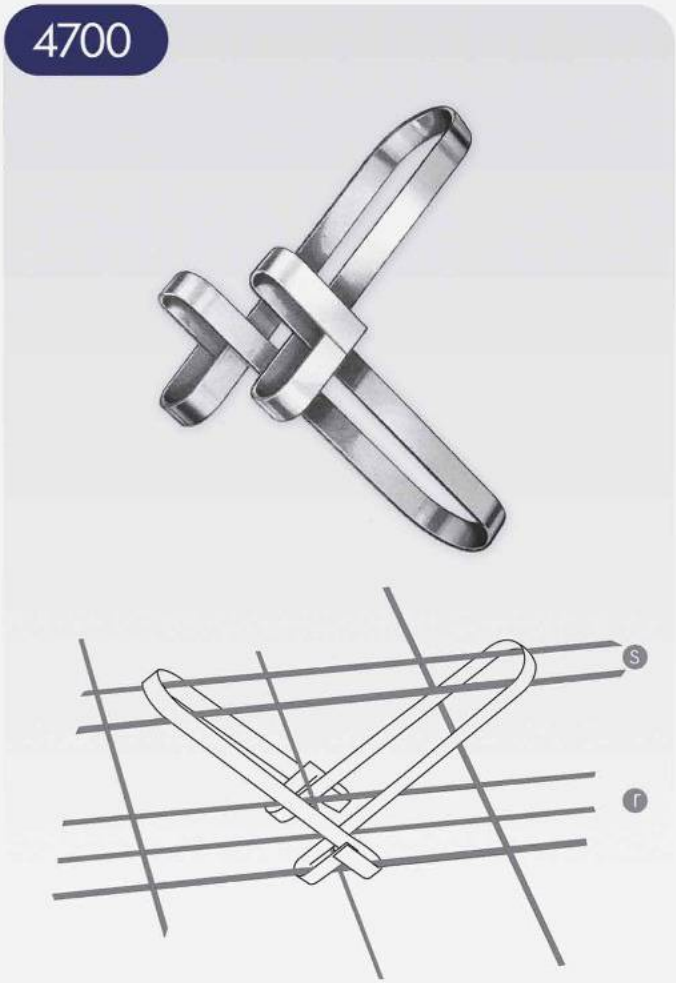

Anchor	r	Length mm	s	Length mm
4700A	Φ 6	700	Φ 6	700
4700B	Φ 6	700	Φ 8	700
4700C	Φ 8	700	Φ 10	700
4700D	Φ 8	700	Φ 10	700

r = Down rebar
s= Top rebar

4710

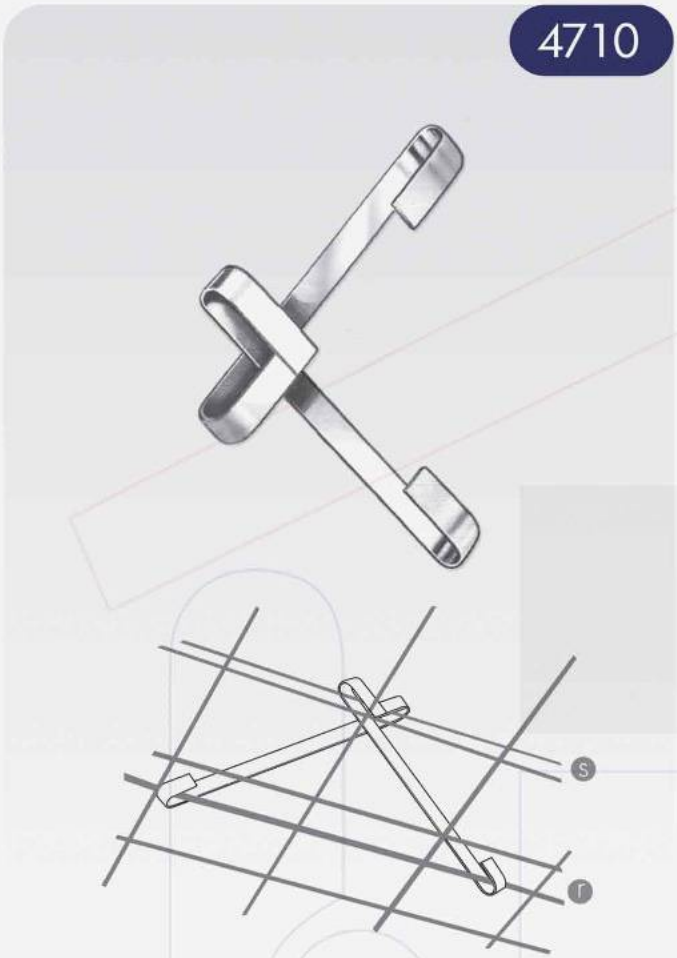

Anchor	r	Length mm	s	Length mm
4710A	Φ 6	700	Φ 6	700
4710B	Φ 6	700	Φ 8	700
4710C	Φ 8	700	Φ 10	700
4710D	Φ 8	700	Φ 10	700

4000,4600,4610 TIES

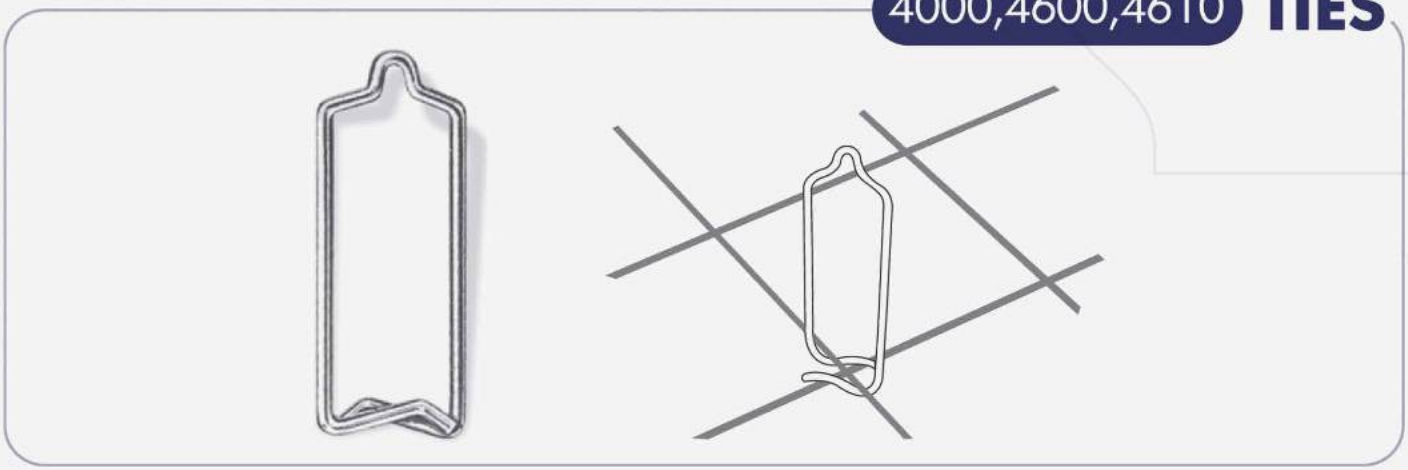

SLEEVE CONNECTOR

Standard dimensions available from stock.
Non-listed dimensions on request.

Type	Height mm	Dia mm
10/07	150	51
15/10	150	76
22/16	150	102
27/21	150	127
32/24	150	153
38/27	150	178
43/31	150	204
46/33	150	229
54/36	150	255
59/38	150	280
10/07	175	51
15/10	175	76
22/16	175	102
27/21	175	127
32/24	175	153
38/27	175	178
43/31	175	204
46/33	175	229
54/36	175	255
59/38	175	280
10/07	200	51
15/10	200	76
22/16	200	102
27/21	200	127
32/24	200	153
38/27	200	178
43/31	200	204
46/33	200	229
54/36	200	255
59/38	200	280

FLAT ANCHOR

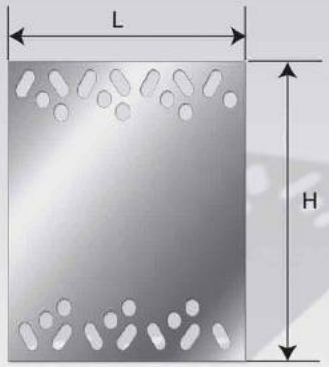

Description	H mm	L mm
MF-FTA-175-	175	40
MF-FTA-175-	175	80
MF-FTA-175-	175	120
MF-FTA-175-	175	160
MF-FTA-175-	175	200
MF-FTA-175-	175	240
MF-FTA-175-	175	280
MF-FTA-175-	175	320
MF-FTA-175-	175	360
MF-FTA-175-	175	400
MF-FTA-200-	200	40
MF-FTA-200-	200	80
MF-FTA-200-	200	120
MF-FTA-200-	200	160
MF-FTA-200-	200	200
MF-FTA-200-	200	240
MF-FTA-200-	200	280
MF-FTA-200-	200	320
MF-FTA-200-	200	360
MF-FTA-200-	200	400
MF-FTA-225-	225	40
MF-FTA-225-	225	80
MF-FTA-225-	225	120
MF-FTA-225-	225	160
MF-FTA-225-	225	200
MF-FTA-225-	225	240
MF-FTA-225-	255	280
MF-FTA-225-	225	320
MF-FTA-225-	225	360
MF-FTA-225-	225	400

CONNECTOR PIN

Description	Height mm	Weight % Kg
MF-HRPN-28-120	120	14.20
MF-HRPN-28-140	140	16.20
MF-HRPN-28-160	160	18.20
MF-HRPN-28-180	180	18.70
MF-HRPN-28-200	200	22.40
MF-HRPN-28-220	220	24.40
MF-HRPN-28-240	240	26.30
MF-HRPN-28-160	160	36.80
MF-HRPN-28-180	180	42.00
MF-HRPN-28-200	200	46.80
MF-HRPN-28-230	230	50.80
MF-HRPN-28-250	250	56.30
MF-HRPN-28-280	280	61.00

CONNECTOR PIN

Part No.	Pin dia mm	Length mm
MF-CLP-HRN-28-120	2.8	120
MF-CLP-HRN-28-140	2.8	140
MF-CLP-HRN-28-160	2.8	160
MF-CLP-HRN-28-190	2.8	190

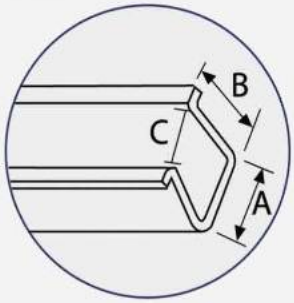

DOVETAIL ANCHORS SLOT

Dovetail Anchors Slot

Type	Dimensions		
	A	B	C
Standard	1″	1″	5/8″
Large	2″	1½″	1½″
Shallow	7/8″	1/2″	1/2″

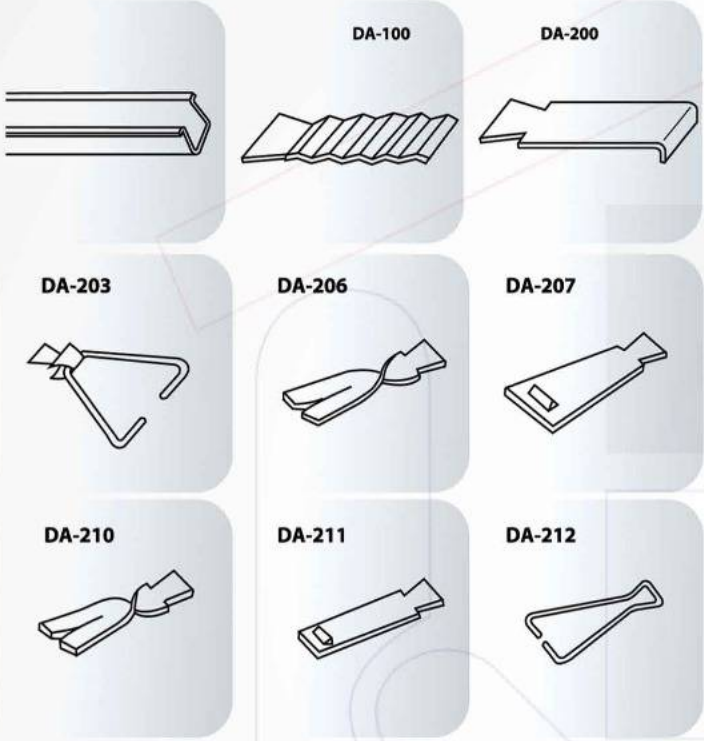

CAVITY WALL TIE

Standard Type

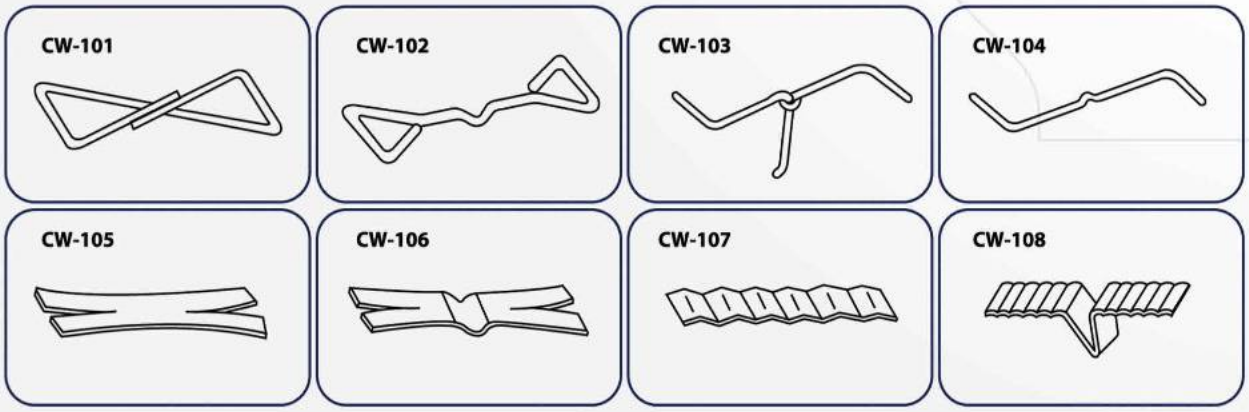

BUCK & FRAME ANCHORS

Type	Size	Type	Size
BA-100	16 Gauge X 1" W X 3½" L X 1¼" H 16 Gauge X 1½" W X 8"L X 1½" H	BA-103	14 Gauge X 1¼" W X 4"L X 2" H1 X H2 14 Gauge X 1½" W X 8"L X 2" H X 1"H
BA-101	16 Gauge X 2" W X 8"L X 2" H 16 Gauge X 1¼" W X 3½"L X 1¼" H	BA-104	16 Gauge X 1½" W X 4" L X 4" H
BA-102 Key Hole	14 Gauge X 1½" W X 4"L X 1½" H	BA-105	16 Gauge X 1½" W X 10"L
		BA-106	16 Gauge X 1¼" W X 4" L X ¼" H
		BA-107	16 Gauge X 1¼" W X 4"

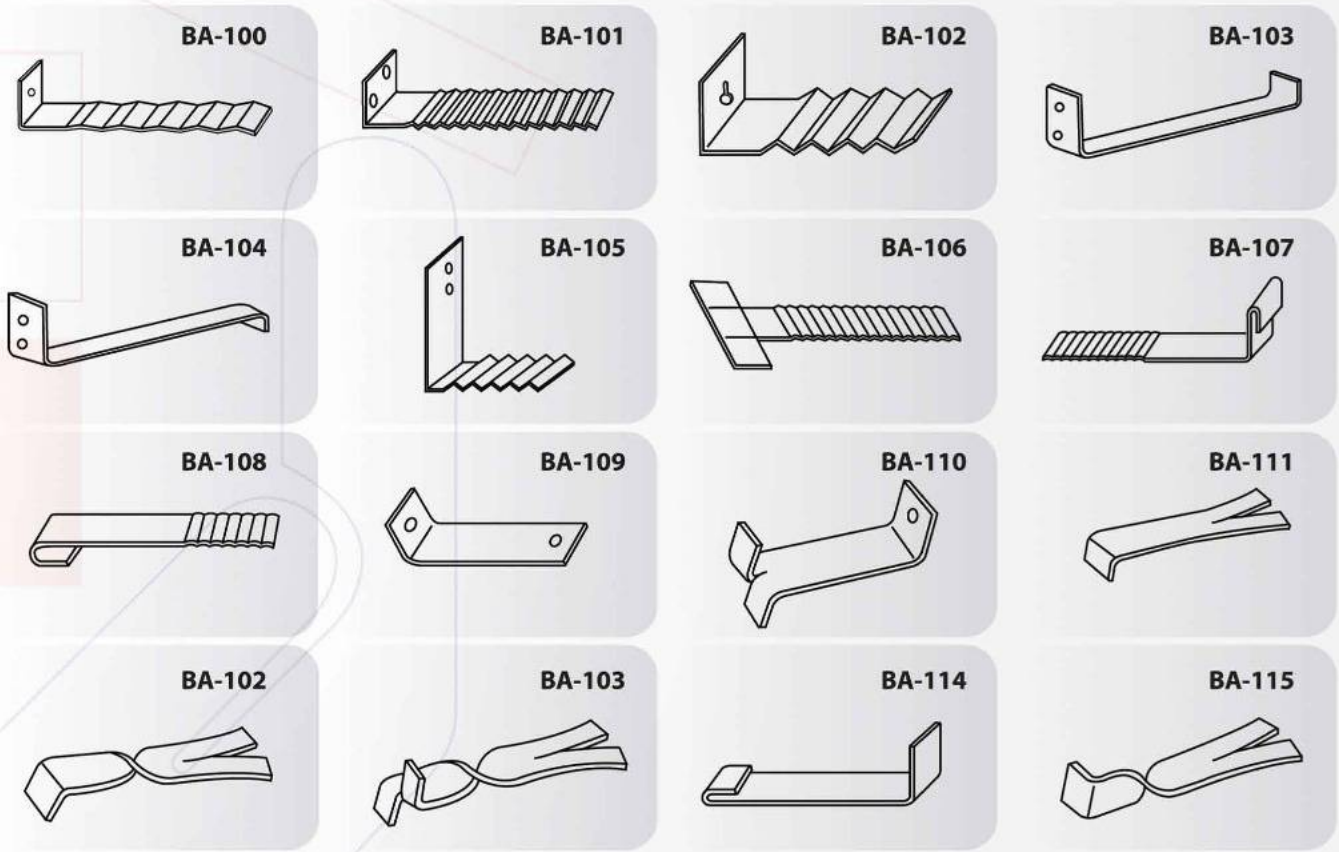

WELD-ON ANCHORS - ADJUSTABLE

Size (Length)	Width (Split End)
3"	4 - 1/2"
5"	5 - 3/8"
7"	6 - 3/8"
9"	7 - 3/8"

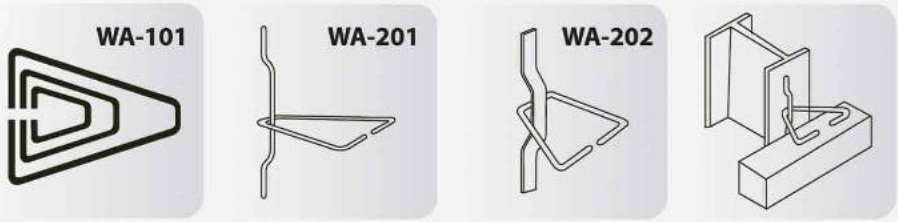

Closed End is 1" wide.
Split-end opening is ½".

Pipe Clamps for rigid steel conduit

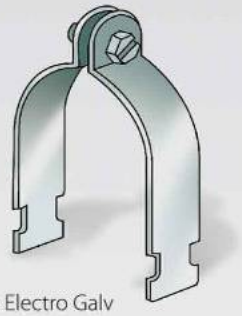

Finish : Electro Galv

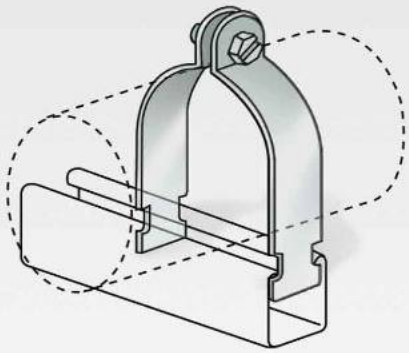

Pipe Size	O.D Size		Thickness		Weight	Design Load
Inch	Inch	mm	Inch	mm	Kg	kN
3/8	0.675	17.1	16	1.5	4.5	1.8
1/2	0.840	21.3	16	1.5	5.0	1.8
3/4	1.050	26.7	14	1.9	6.8	2.7
1	1.315	33.4	14	1.9	7.7	2.7
1 1/4	1.660	42.2	14	1.9	8.6	2.7
1 1/2	1.900	48.3	12	2.7	13.2	3.6
2	2.375	60.3	12	2.7	15.4	3.6
2 1/2	2.875	73.0	12	2.7	18.1	3.6
3	3.500	88.9	12	2.7	21.3	3.6
3 1/2	4.000	101.6	11	3.0	28.1	4.4
4	4.500	114.3	11	3.0	30.4	4.4
5	5.563	141.3	11	3.0	36.3	4.4
6	6.625	168.3	10	3.4	46.3	4.4
8	8.625	219.1	10	3.4	59.0	4.4

Adjuatable Clevis Hanger

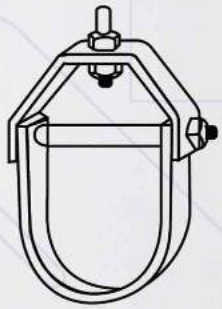

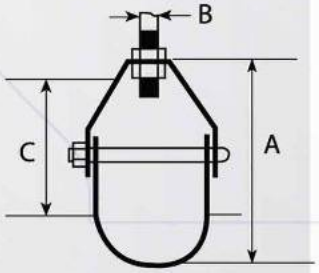

Pipe Size	Pipe Size	A		B		C		D		Bolt Size		Design Load kN
Inch	mm	Inch	mm	Inch	mm	Inch	mm	Inch	mm		mm	
1/2	13.0	2 7/8	73	3/8	10	1 3/16	30	1	25.4	1/4 x 2	6 x 51	2.7
3/4	19.0	3 7/16	78	3/8	10	1 7/8	47.6	1	25.4	1/4 x 2	6 x 51	2.7
1	25.4	3 3/8	86	3/8	10	2 1/16	52.4	1	25.4	1/4 x 2 1/4	6 x 57	2.7
1 1/4	32.0	3 3/4	95	3/8	10	2 1/4	57	1	25.4	1/4 x 2 1/4	6 x 57	2.7
1 1/2	38.0	4 1/16	103	3/8	10	2 3/8	60	1	25.4	1/4 x 2 3/4	6 x 70	2.7
2	51.0	4 1/2	114	3/8	10	2 3/4	69.4	1	25.4	1/4 x 3 1/4	6 x 82.5	2.7
2 1/2	63.5	5 1/2	140	1/2	13	3 1/4	82.5	1	25.4	3/8 x 4 1/2	6 x 114	5.0
3	76.0	6 1/8	155.6	1/2	13	3 1/2	89	1 1/4	32	3/8 x 5 1/4	6 x 113	5.0
3 1/2	89.0	6 3/4	171.5	1/2	13	3 3/4	95	1 1/4	32	3/8 x 5 3/4	6 x 146	5.0
4	101.6	7 5/8	193.4	5/8	16	4 1/4	108	1 1/2	38	3/8 x 6 1/4	6 x 159	6.4
5	127.0	8 7/8	255.4	5/8	16	5 1/4	133.4	1 1/2	38	1/2 x 7 1/2	6 x 190.5	6.4
6	152.4	10	254	3/4	19	5 1/2	140	1 1/2	38	1/2 x 8 1/2	6 x 216	8.6
8	203.0	12 3/4	323	7/8	22	7 1/8	101	2	51	5/8 x 11	6 x 279.4	8.6
10	254.0	17 1/8	435	7/8	22	11 1/8	282.5	3 1/4	82.5	3/4 x 13 1/2	6 x 343	16
12	304.0	18 5/8	473	7/8	22	11 5/8	295	3 1/2	89	3/4 x 15 3/4	6 x 400	16

PIPE CLAMPS

Size Inch	Inside f mm	Thread Nut mm
½	22	10
¾	27	10
1	34	10
1¼	43	10
1½	49	10
2	61	10
2½	73	12
3	89	12
4	115	12
5	142	16
6	169	16
8	220	16

STRAP HANGER

Strap Hanger is available to suit a wide range of pipe sizes, can be supplied with or without hanger nut.

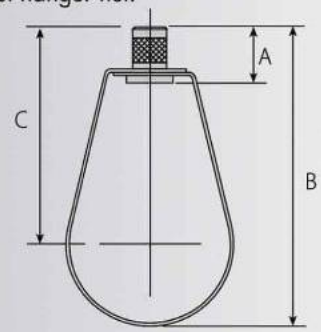

Nominal Bore	Dimensions mm A	B	C	Nuts tapped	Without Nut
25	22	75	57.5	10	11
32	22	86	64	10	11
40	22	99	74	10	11
50	22	116	85	10	11
65	22	135	96.5	10	11
80	22	159	14	10	11
100	22	219	161	10	11
125	26.5	247	177	12	13
150	26.5	284	199.5	12	13
200	24	373	261	16	13

FLANGE CLAMPS

Material
Malleable iron, zinc plated, with set screws grade 8.8 and lock nut

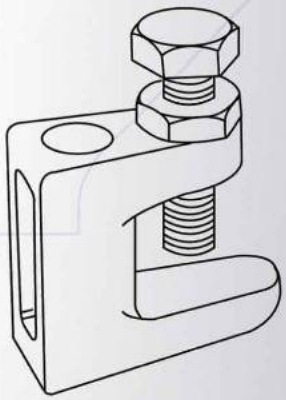

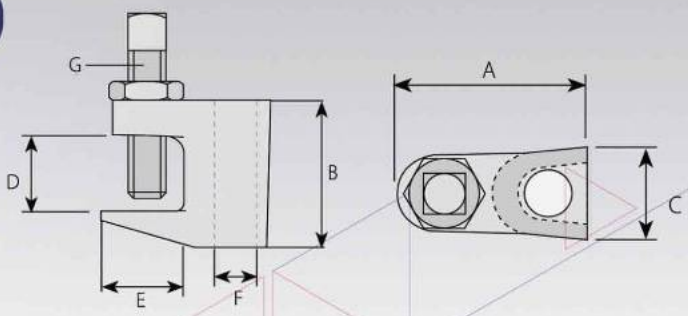

Drop Rod	Tensile Loads SWL 4:1 kN	A mm	B mm	C mm	D mm	E mm	F mm	G mm
M6	1.1	36	35	19	17	20	7	8
M8	1.1	36	35	19	17	20	9	8
M10	2.4	45	40	22	19	22	11	10
M10	3.1	50	46	25	23	28	13	10
M12	3.1	53	51	26	28	27	13	10

Applications
Pipelines, tubes and sanitary installations.
Heating, ventilation and air conditioning, acoustic constructions.
Machine installations and steel constructions.

OUR VALUED CUSTOMERS

مجموعة أبا حسين
ABAHSAIN GROUP

AL.YAMAMA

LARSEN & TOUBRO
It's all about Imagineering

KCC

الرياض نيو موبيلتي
ArRiyadh New Mobility

SAUDI kad

KAIE Meeting the demands of a diversified market

almabani

AME

الفنار
alfanar

فريسينه السعودية العربية
Freyssinet
SAUDI ARABIA

中国地质工程集团公司
CHINA GEO-ENGINEERING CORPORATION

aic
arabian international company

Technip
take it further.

MCSC

Arabtec Construction
"The Standard of Quality"

root steel syste

Lind

شركة العيوني للاستثمار و المقاولات
AL-AYUNI INVESTMENT & CONTRACTING CO.

ARABIAN PIPECOATING COMPANY

أزميل
AZMEEL
Contracting

البابطين للطاقة و الاتصالات
AL-BABTAIN POWER & TELECOM

المحاور العربية
ARABIAN AXLES

قطار الرياض
riyadh metro

الخضري
AL-KHODARI

Tepe Akfen
TAV Construction

ASIA
PRIME GENERAL CONTRACTING CO.

Ammico
Passion for Excellence

AFI

Sure Track
Contracting Co.

YÜKSEL

SATC

مجموعة مشنان
Mishnan Group

handar

Pan Gulf Industrial S
TOTAL SOLUTIONS · ENGINEERING EX

KIFAH
شركة الكفاح القابضة
Al-Kifah Holding Company

SHADE CORPORATION

Contractin
Construct
Enterpri

Form the foundatation to the roof

We Supply The Folloing Items

Sales Department

Tel. : 013 802 0628
Fax : 013 802 0689
Mob : 055 650 8317
sales@mafcosaudi.com
sulaiman@mafcosaudi.com

Technical Department

Tele : 013 802 0628
Fax : 013 802 0689
Mob : 050 521 4421
Technical@mafcosaudi.Com

www.mafcosaudi.com